JAYLINE

Specifications

Classic Clean Air Insert

Hearth Construction

The minimum dimension required is 800mm wide and the hearth must extend 300 mm beyond the door of the heater with a 35mm height insulated hearth. For other forward hearth distances refer to the graph below.

The hearth must be constructed of masonry of at least 50mm thickness or any suitable fire retardant board, ie. Micore 160*, Woodtex* or Rockboard*, covered by tiles, slate, marble or any alternative thermal insulation of equivalent k-value. To comply with AS/NZS 2918:2001 a provision has been made at the front of the cabinet to bolt the fire down through the floor for seismic restraint.

- Refer to manufacturer's instructions.

Clearance Requirements

The Classic Clean Air Insert complies with the New Zealand Standard AS/NZS 2918:2001 and all installations must be in accordance with the minimum clearances to combustibles indicated in these instructions.

The minimum clearances to combustibles may be reduced if the combustible walls are shielded with an approved non-combustible material. Details of suitable shielding materials and appropriate clearance reduction factors are present in Section 3 of AS/NZS 2918:2001.

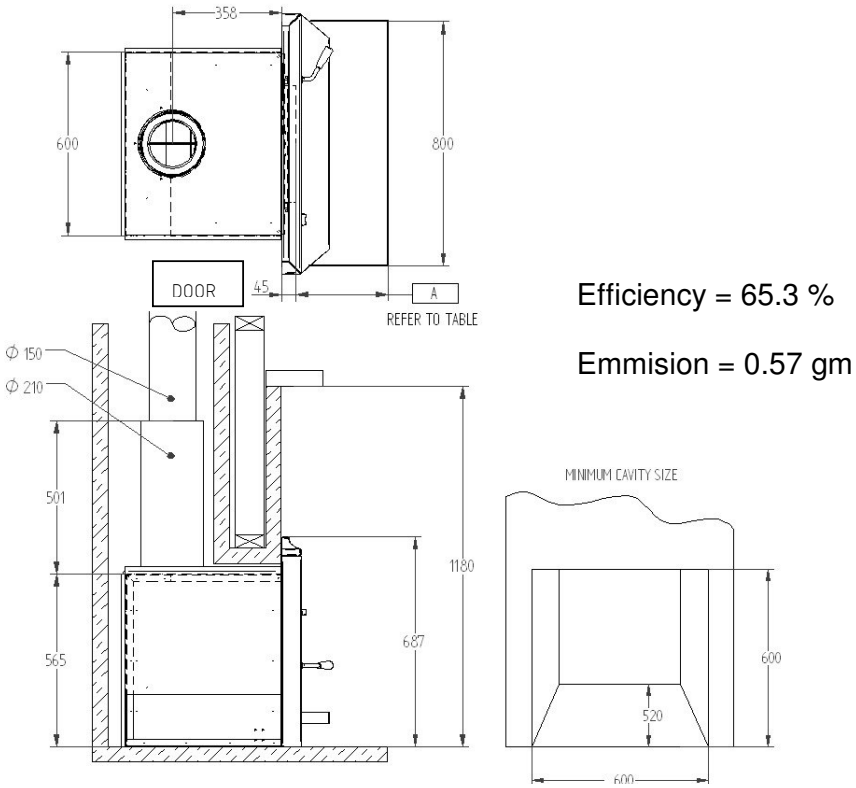

HEARTH PROJECTIONS

Hearth Height (mm)	0	35	50	110	125
Required Hearth Projection 'A'	400	300	300	300	300

Note: The hearth projection is from the glass.

JAYLINE

Classic Clean Air Insert

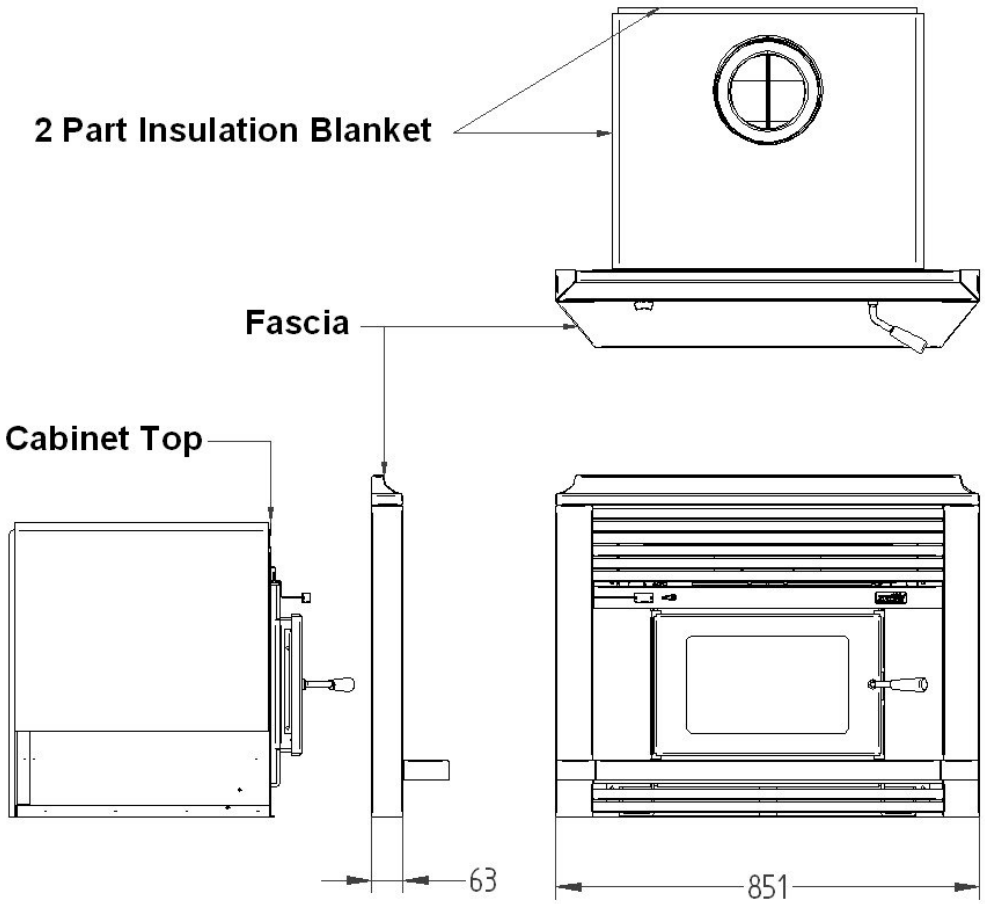

Cabinet Top

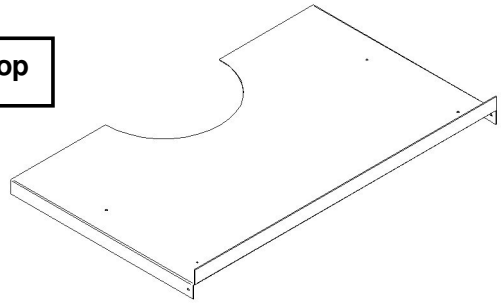

Heat Cabinet

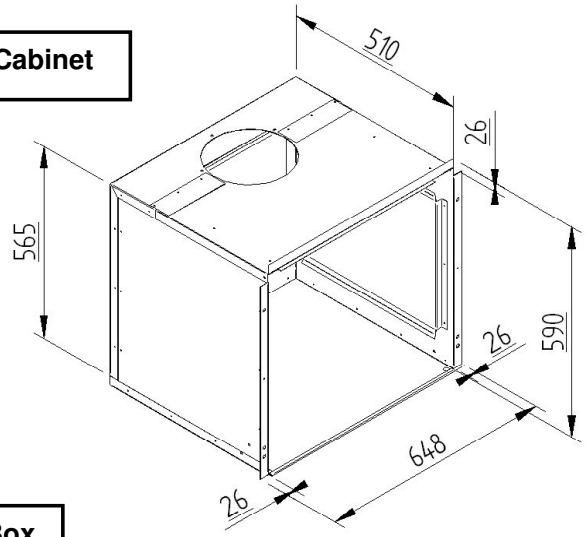
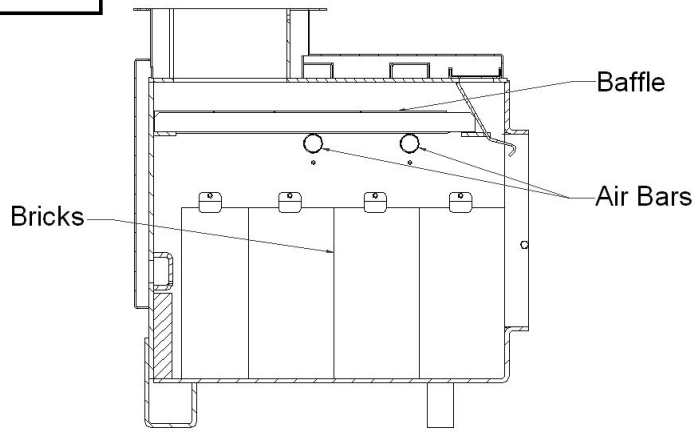
Fire Box